Busbar-support 60mm-system, series ARROW

IS502752

Schrack-Info

- Can be built on, high short-circuit protection, UL94-V0
- Temperature resistance: +200 °C, 960 °C glow wire
- Rated operating voltage: 690 V
- Tightening torque for top screws: 3 - 4 Nm

IS502750 Dimensions

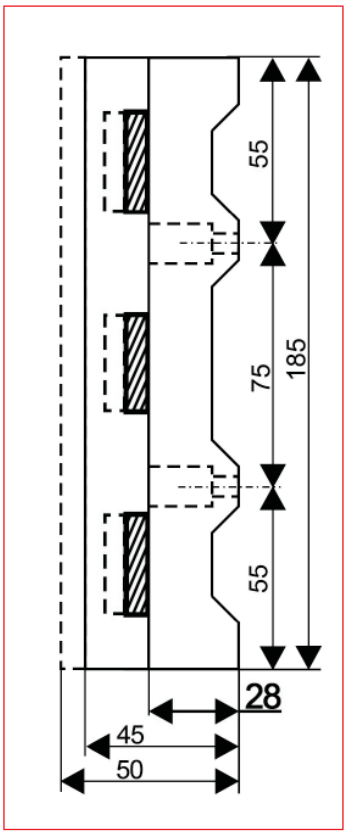

DESCRIPTION	AVAILABLE	ORDER NO.
3pole, short, 60mm system		**IS502750**
3pole, long, 60mm system		**IS502752**
1 pole, detachable, 60mm system		IS502754
2 pole, single, 60mm system		**IS502755**
Busbar support end-bracket 3pole, 60mm system		**IS502757**

Page 219

ARROW R Switch Disconnector D02

IS503863

Schrack-Info

- Bus-mounted fuse-switch-load-disconnector, for 3-pole busbar system for fuse links D0
- For fuses and gauge rings in according IEC 60269-3
- For 60mm busbar-system

Fuse-size	D02 in according EN 60269-3
Rated current (IEC):	63 A
Poles:	3-pole
Rated voltage (IEC) AC:	400 V
Utilisation category AC (IEC 60947-3):	AC-22B (400V)
Rated isolation voltage Ui:	500 V
Rated surge voltage Uimp:	6 kV
Max. permitted voltage (IEC) AC:	800 V
Cond. rated short-circuit current with fuses:	50 kA / 400V
Material properties body:	temperature stability 140°C,
	self-extinguishing in acc. to UL 94,
	creepage resistance CTI 225,
	silicon-free, halogen-free
Material properties handle:	temperature stability 120°C,
	self-extinguishing in acc. to UL 94,
	creepage resistance CTI 200
Terminal points	1,5 - 16 mm² stranded and flexible without ferrule
	1,5 - 10 mm² flexible with ferrule
	1,5 - 10 mm² fixed

IS503863 Dimensions

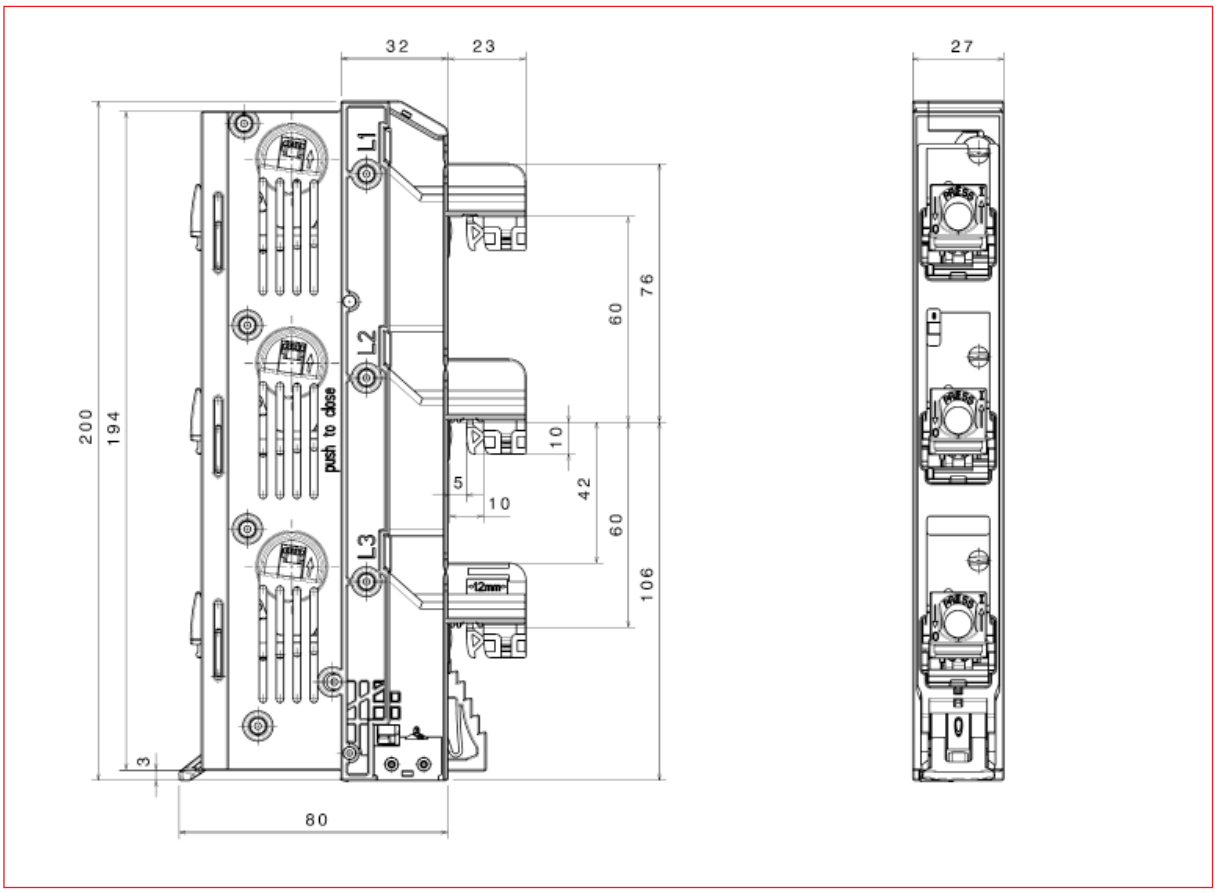

ARROW R Switch Disconnector D02

IS503863 Wiring diagram

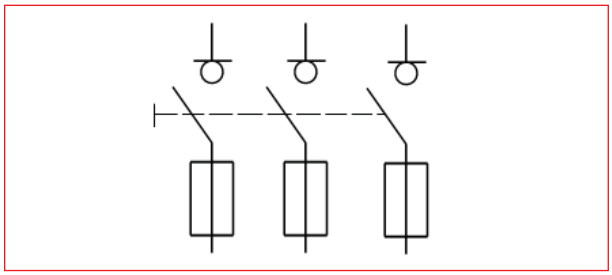

DESCRIPTION	AVAILABLE	ORDER NO.
63A		**IS503863**

ARROW R Switch Disconnector D02 with fixed adjusting sleeves

IS503825

Schrack-Info

- Fixed sleeve rings

DESCRIPTION	AVAILABLE	ORDER NO.
20A, complete		**IS503820**
25A, complete		**IS503825**
35A, complete		**IS503835**
50A, complete		**IS503850**

Tytan R Switch Disconnector D02

IS504851

IS504853

Schrack-Info

- Including D0 fuse-plug with flashing indicator
- Including plug retaining spring for D01 and cylindrical fuses 10x38 mm
- Removable fuse-plug reliable fuse-blown indication
- Securing against restarting sealable
- 27mm wide

Classification	Switch disconnector fuse
Standards	EN 60947-3, IEC 947-3, DIN VDE 0638
Suitable for D0 fuses DIN 49522	D01, 2, 4, 6, 10, 13, 16 A with plug retaining spring
	D02: 20, 25, 32, 35, 40, 50, 63 A
Suitable for cylinder fuses IEC/EN 60269-1	10x38 mm: 2 ... 32 A with plug retaining spring
Suitable for gauge-pieces DIN 49523	DO2: 2, 4, 6, 10, 16, 20, 25, 35, 50 A
Number of poles	3-pole
Rated operational voltage U_e	D0: 400V-AC, 10 x 38 zyl. 500V-AC
Rated operational current I_e	63 A
Rated impulse withstand voltage U_{imp}	6000 V
Rated short circuit making capacity I_{cm}	50 kA_{eff}
Utilisation category	AC 22B
Power loss	4,5 W
Overvoltage category	IV (DIN VDE 0110)
For busbarsystem	60 mm - system
For busbar-type	12, 15, 20, 25, 30 mm wide, 5 or 10 mm thick
Insulating parts	Plastic, halogen-, phosphorus-, silicone-free
Fire classification /Leakage current resistance	UL94/V0, glow wire test 960 °C / CTI600
Degree of protection / touch protection	IP 20 / finger and hand touch safe
Ambient temperature min/max	- 25 °C / 60 °C
Degree of pollution	3 (DIN VDE 0110)
Connection style	Stainless steel cage terminal
Terminal capacity	1,5 - 35 mm^2
Torque M_D	4 Nm

Tytan R Switch Disconnector D02

IS504851 Dimensions

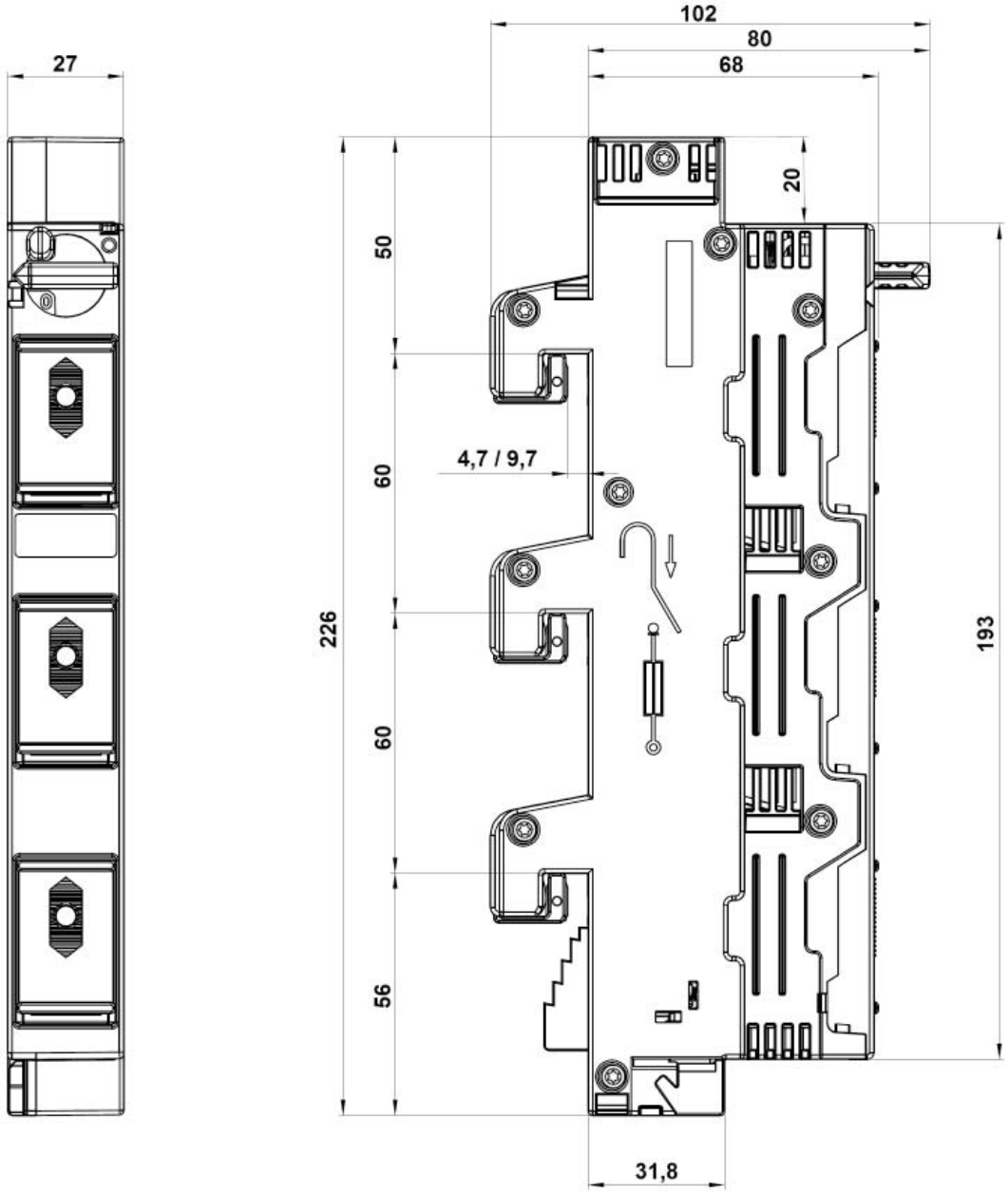

IS504851 Wiring diagram

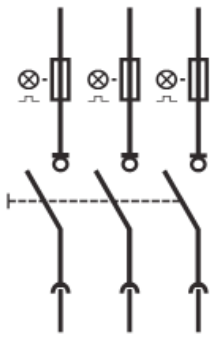

Tytan R Switch Disconnector D02

IS504858 Dimensions

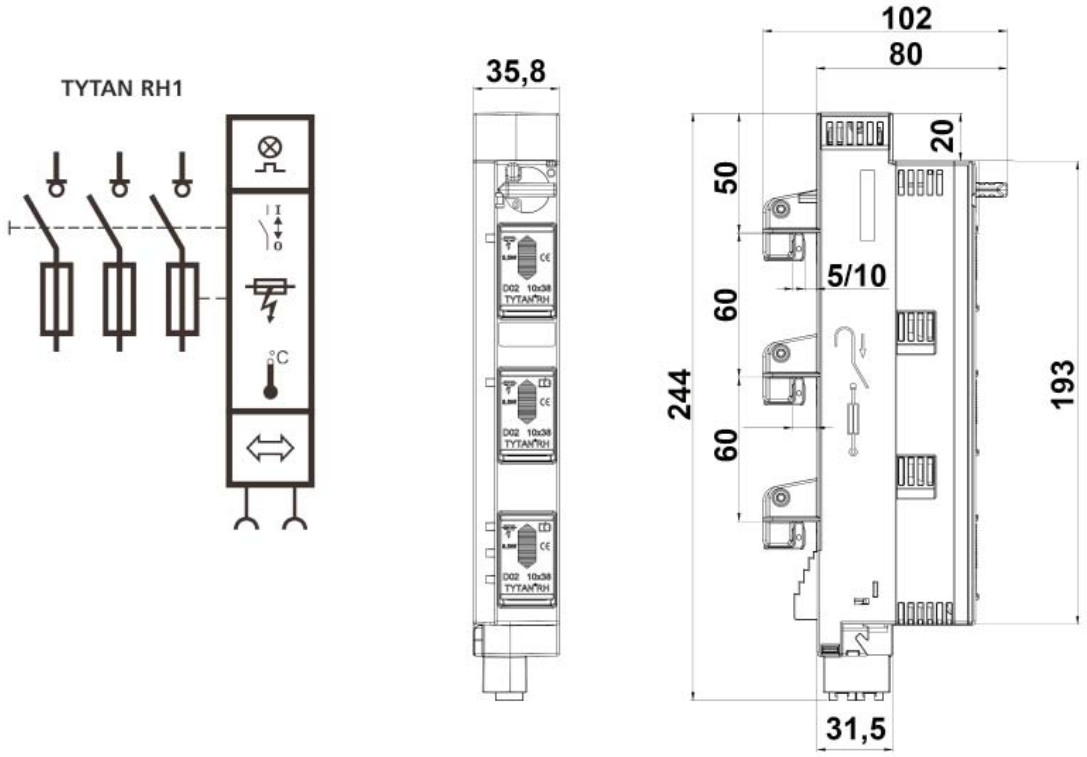

DESCRIPTION	AVAILABLE	ORDER NO.
20A, 3-pole		IS504853
63A, 3-pole		**IS504851**
63A, 3pole+N		**IS504852**
TYTAN RH1-Load-Breaker D02 for 60mm-System with monitoring		IS504858
TYTAN HR12-relays summary-module-monitoring 2 C/O 5A / 250 VAC		**IS504871**
TYTAN HR11-relays single-module-monitoring 2 C/O 5A / 250 VAC		**IS504870**
TYTAN HC-Patchcord RJ10 15 cm		IS504873
TYTAN HC-Patchcord RJ10, 100 cm		**IS504877**

Tytan R Switch Disconnector D02 with fixed adjusting sleeves

IS504853

Schrack-Info

- Fixed sleeve rings

DESCRIPTION	AVAILABLE	ORDER NO.
20A, 3-pole		IS504853
25A, 3-pole		**IS504854**
35A, 3-pole		IS504855

Tytan R Switch Disconnector D02 Terminals

IS504879

IS504879

Schrack-Info

- Ammeter at all three phases
- Data memory for monitoring (min, max und average of the last 24h)
- For subsequent assembly on TYTAN R
- For D0-fuses 2...63A
- For use in all three phases, the load of the phases can be continuously monitored.

Rated current I_n	63 A
Measurement range AC	0-75 A
Max. continuous current I_B	50 A
Rated voltage	400V AC
Power loss	≤ 2,1 mVA
Procedure AC	True RMS
Wave form	symmetric
Rated frequency f_n	50 Hz
Frequency range	47-65 Hz
Accuracy	± 1% ± 1 digit at I_n at 25 °C ± 1 °C
Definition	100 mA (0.0...9.9 A), 1A (10...99 A)
Measurement rate	1 rating/ 1,4 s
Reference-temperature	25 °C ± 1 °C
Insulating parts	Plastic, halogen-, phosphorus-, silicone-free
Fire classification	UL94/V0
Leakage current resistance	CTI 600

DESCRIPTION	AVAILABLE	ORDER NO.
Ammeter-plug in for TYTAN R, D02, 3-pole for 60mm-system		**IS504879**

Coron R Switch Disconnector D02

IS503563

Schrack-Info

- Flashing indicator
- For 60mm busbar-system
- Compact dimensions
- Plastic free of halogens
- Output top side

Rated voltage U_e	400V-AC
Rated current I_e	63A
Rated short circuit making capacity I_{CM}	$50kA_{eff}$
Connection style	Stainless steel cage terminal
Terminal capacity	1,5-25 mm^2
Turning Moment	3Nm

Dimensioned drawing

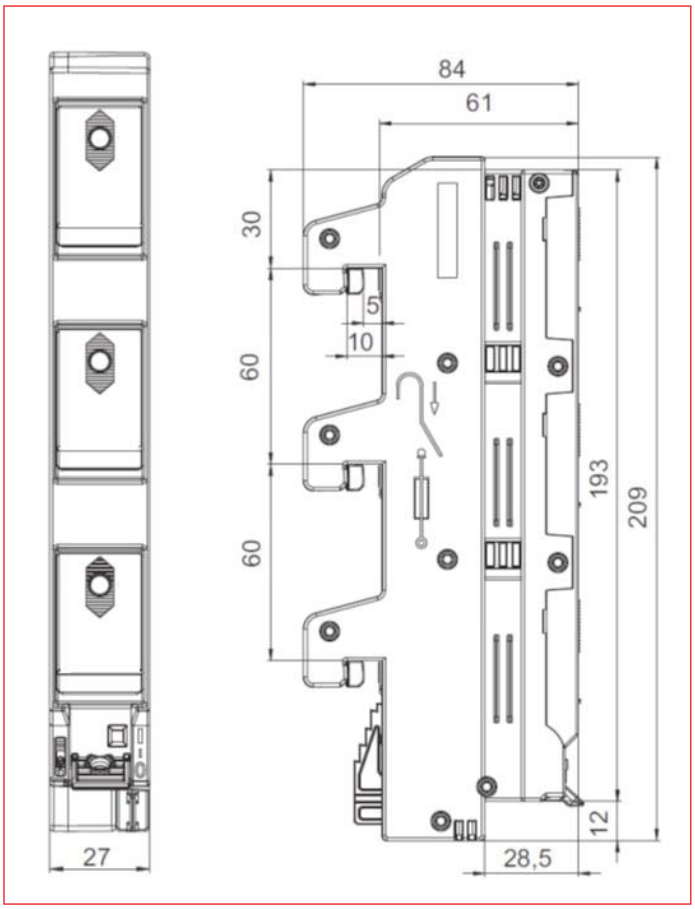

DESCRIPTION	AVAILABLE	ORDER NO.
D02, 3poles, 63A		IS503563
Duct for CORON R (2parts)		IS503569

D02-Switch Disconnector for 60mm busbar-system

IS504823

Schrack-Info

- Integral labelling field, loss-free stainless steel clamp
- Temperature resistance: +200 °C, 960 °C glow wire

Size of fuse	D02
Poles	3-pole
D0-fuse links	2 - 63 A
D02 gauge	acc. DIN 49523
Creep resistance	CTI600
Fire class	UL94-V0
Rated operation voltage U_e	400V AC / 250V DC
Rated short circuit making capacity I_{cm}	50 kA
Busbar-system	60 mm
Busbar-size	12, 15, 20, 25, 30 mm
Busbar-thickness	5, 10 mm
Terminal	V2A
Terminal capacity	1,5 - 25mm²
Torque	3-4 Nm

IS504823 Dimensions

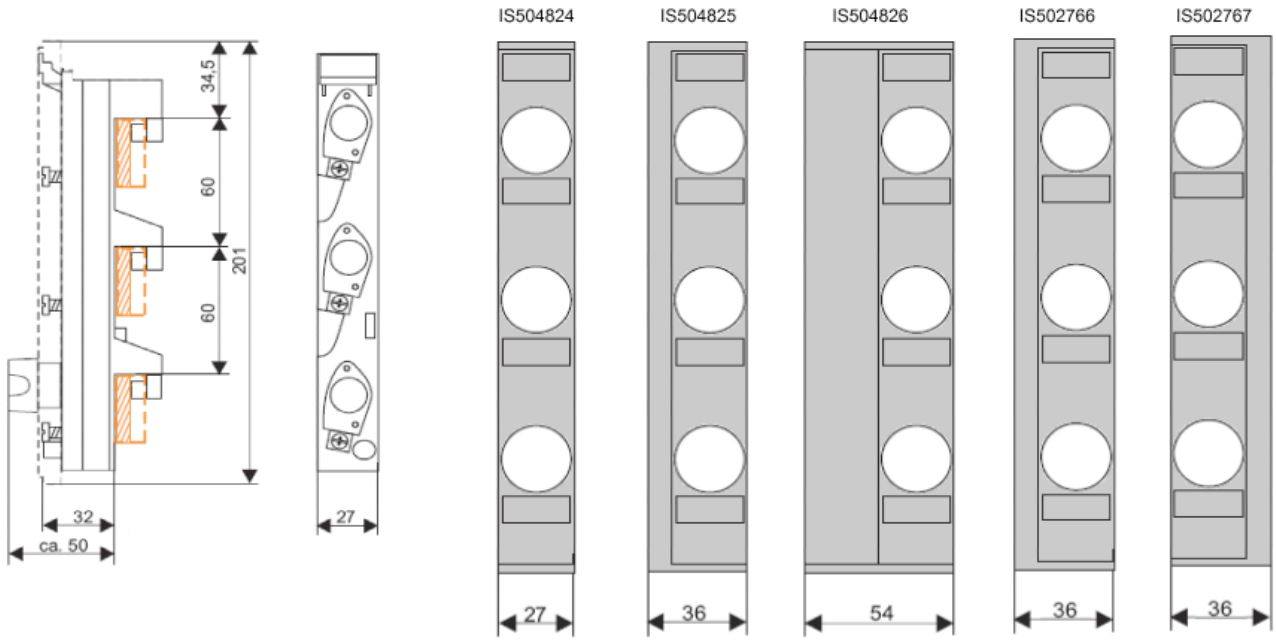

DESCRIPTION	AVAILABLE	ORDER NO.
D02-fusebase for 60mm busbar-system E18 without cover		**IS504823**
Cover for D02-fusebase E18, 3-pole		**IS504824**
Cover for D02-fusebase E18, 36mm with distancepart, 3-pole		**IS504825**
Cover for D02-fusebase E18, 54mm with distancepart, 3-pole		IS504826
D02 screw cap E 18, 63 A, plastic 400 V, plastics material		**SI310060**

Page 227

HRC-busbar-fuse load-breaker size 000 (100A) for 60mm system, 54mm, series ARROW II

ISA05019

Schrack-Info

- Compact design, 63mm installation width
- Snap on installation without screws
- For busbars with 12-30 mm width and 5-10 mm thickness

Size	NH000
Poles	3
Applicable for fuse-links	NH000
Standard	IEC/EN 60 947-3
Type of installation	Busbar mounting
Busbar distance	60mm
Switching mode	3pole switchable
Rated operating voltage	500V
Rated operating current	125A
Conv. free air thermal current with fuse-links	125A
Conv. free air thermal current with solid links	160A
Rated impulse voltage	8kV
Rated isolation voltage	500V
Rated frequency	40 - 60Hz
Total power loss at Ith (without fuse-link)	18W
Utilisation category	AC-22B (500V/125A)
	DC-22B (220V/100A)
Rated conditional short-cirquit current	50kA (AC 500V)
Max. permissible power dissipation per fuse-link	8W
Ambient temperature	-25 up to +55°C
	>35°C derating of rated current required
Type of Actuation	Dependent manual operation
Mounting position	vertical
Altitude	2000m
Pollution degree	3
Overvoltage category	III
Electrical endurance (switching cycles)	200
Mechanical endurance (switching cycles)	1400
Degree of protection	IP20
Direction of cable terminal	bottom side
Terminal type	Elevator-clamp
Clamping range	1,5 - 50mm² Cu
Isolation strength	max. 20mm
Tightening torque	2,6Nm

HRC-busbar-fuse load-breaker size 000 (100A) for 60mm system, 54mm, series ARROW II

ISA05019 Dimensions

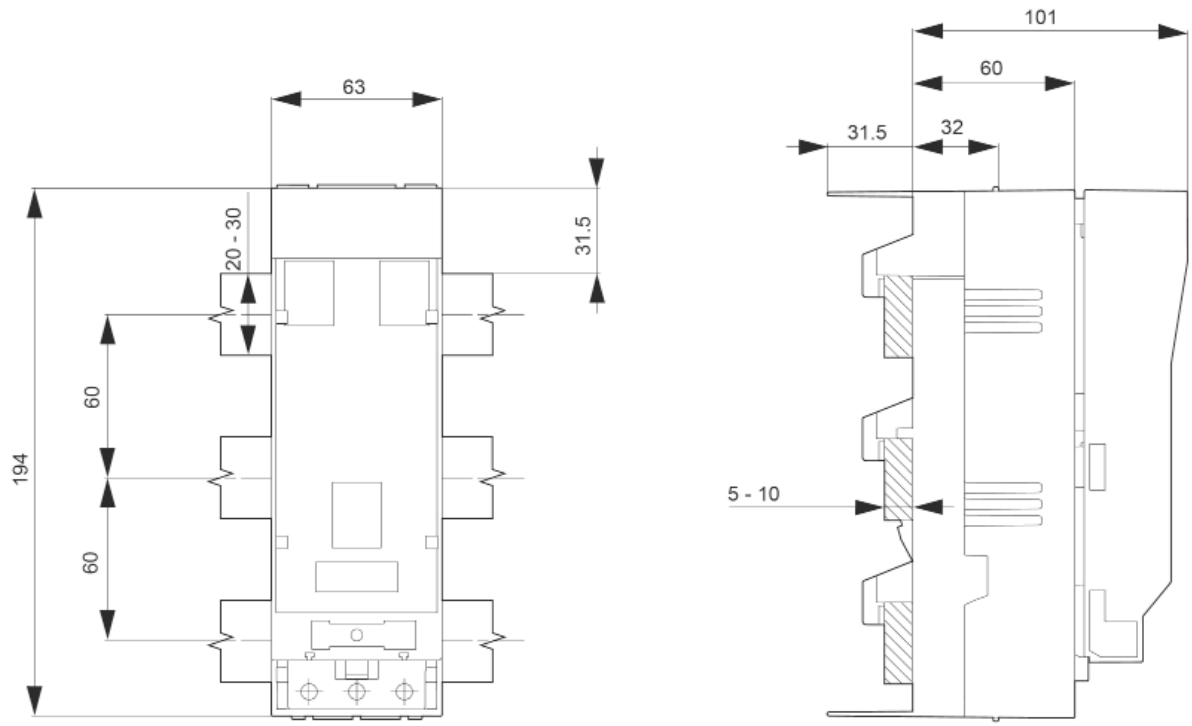

ISA05019 Wiring diagram

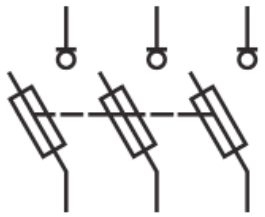

DESCRIPTION	AVAILABLE	ORDER NO.
Arrow Bloc C00 for 60mm busbar inout bottom		**ISA05019**

HRC-busbar-fuse load-breaker size 000 (100A) for 60mm system, series ARROW II

IS505019-B

Schrack-Info

- Device width 54 mm
- Touch protection IP 3x
- Lid lock combined with sealing
- Connection box terminal up to 2.5-50mm²

Size	000
Poles /Phases	3
Conventional thermal current in free air with NH-fuse links I_{th}	100A
Busbarsystem	60mm
Busbar high	20-30mm
Busbar thickness	5 or 10mm
Standard	IEC/EN 60947-3
Utilisation catagory / Rated operation voltage U_e / Rated operation current I_e	AC 22 B / U_e = 690V / I_e = 100A
	DC 21 B / U_e = 440V / I_e = 100A
Rated operation voltage U_e	690V
Rated isolation voltage U_i	750V
Rated impulse withstand voltage U_{imp}	8kV
Rated frequency	50-60Hz
Maximum permissible rated power output of the NH fuse links P_n	12W
Protection class	IP20
Pollution degree	3
Rated duty continuous operation	non-stop operation
Rated conditional short circuit current for protection by fuses:	AC 50kA (690V/500V)
	DC 25kA (220V/440V)
Electrical live (operations)	300
Mechanical live (operations)	1700
Overvoltage category	III
Standard connection	lift-terminal
Terminal capacity	1,5-50mm²

IS505019 Dimensions

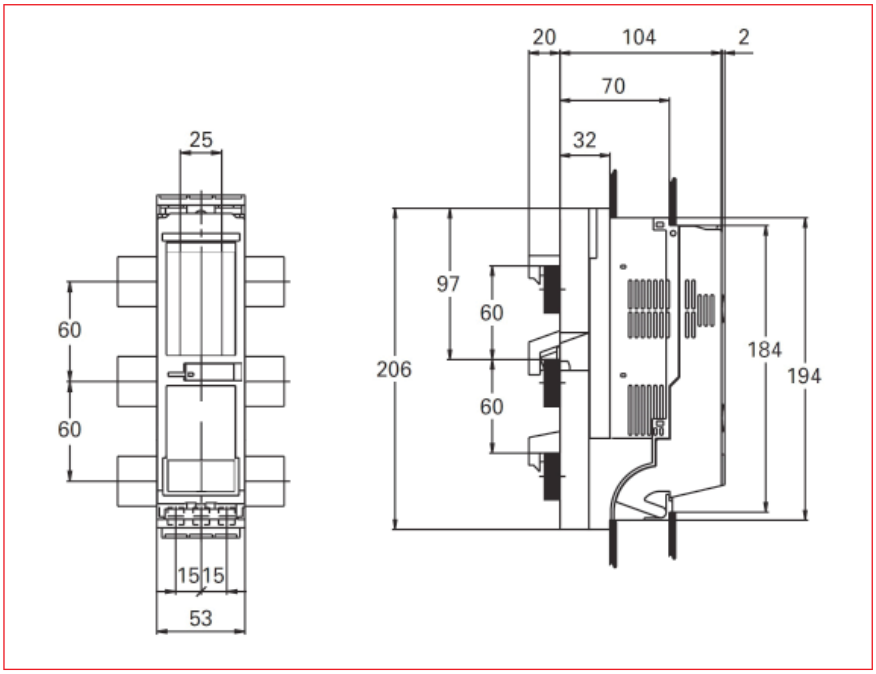

HRC-busbar-fuse load-breaker size 000 (100A) for 60mm system, series ARROW II

IS505019 Wiring diagram

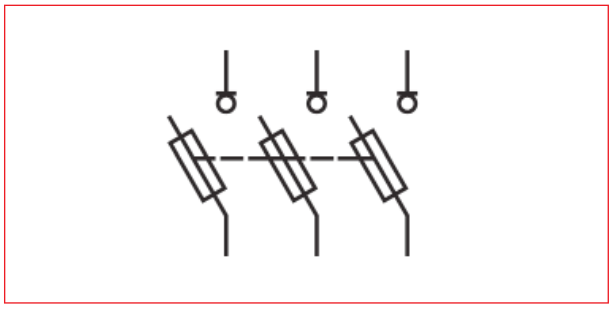

DESCRIPTION	AVAILABLE	ORDER NO.
Arrow Bloc C00 for 60mm busbar system, output bottom		**IS505019-B**

HRC-busbar-fuse load-breaker size 00 (160A) for 60mm system, series ARROW II

ISA05223

For LV HRC fuse-links acc. to DIN VDE 0636-2	Size 000/00
Standard	IEC/DIN/EN 60947-3 / VDE 0660-107
Rated operational voltage U_e	690V-AC
	440V-DC
Rated operational current [1] I_e	160 A
Rated frequency *f*	40 - 60 Hz
Rated insulation voltage U_i	800V-AC
Total power loss at I_{th} (without fuse-links) P_V	14W
Rated impulse withstand voltage U_{imp}	8kV
Utilisation category [2]	AC-23B (400V/160A) [2b]
	AC-22B (500V/160A) [2b]
	AC-21B (690V/160A) [2b]
	DC-22B (250V/160A) [2b]
	DC-21B (440V/160A) [2c]
Rated conditional short-cirquit current [2] [3]	120 kA (500V) [2b]
	100 (690V) [2b]
Rated short–time withstand current Icw	7 kA (1s)
Max. permis. power loss per fuse-link Pa	12 W
Degree of protection	Front side, operating condition IP20
	With clamp- and lateral cover IP20XC
	switching element open IP10
Ambient temperature [4] Tamb	-25 bis +55 °C
Rated operating mode	Uninterrupted duty
Actuation	dependent manual operation
Mounting position	vertical / horizontal
Altitude	up to 2000 m
Pollution degree	3
Overvoltage category	III
Cable terminal, flat terminal	Bolt diameter M8
	Tightening torque M_a 12-15 Nm
Cable terminal, clip terminal	Clamping cross-section conductor round 1,5 - 70 mm² copper
	cusbar 6 x 9 x 0,8
	Tightening torque M_a 2,6 Nm

[1] In case of mounting of several units in low voltage switchgearcombinations, please consider rated diversity factors acc. to EN 61439-1.
[2] It must be considered a minimum distance to earthed, conductive parts:
[2b] Lateral: 20mm / Above: 50mm
[2c] Lateral: 50mm / Above: 100mm
[3] Type tested with LV-HRC-fuse-links characteristic gG.
[4] 35°C Normal temperature, at 55°C with reduced operating current

DESCRIPTION	AVAILABLE	ORDER NO.
Size 00, 3-pole, 160A, M8, with window lock		ISA05223F
Cover one way		ISA05731

HRC-busbar-fuse load-breaker size 00 (160A) for 60mm system, series ARROW BLUE

ISA05223-A

Schrack-Info

- For 60mm busbar-system (5mm or 10mm busbars)
- Output direction from top to bottom is easy and quickly to change
- 1-point quick-fixing
- Integrated infringe-protection side and top
- Contactless fuse take out
- Closing part sealable and lockable
- Park position for closing part
- Patented voltage measuring slots, tool-bound open, without tools close

Dimensioned drawing

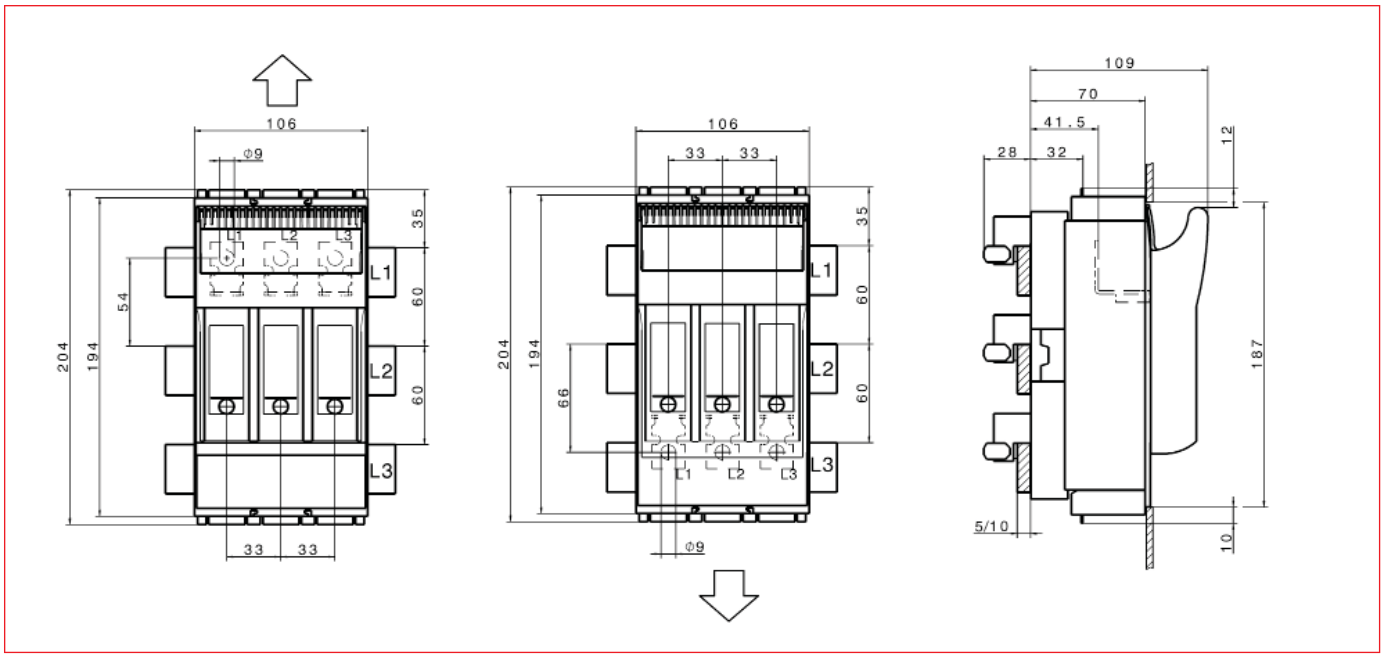

ISA05223-A Wiring diagram

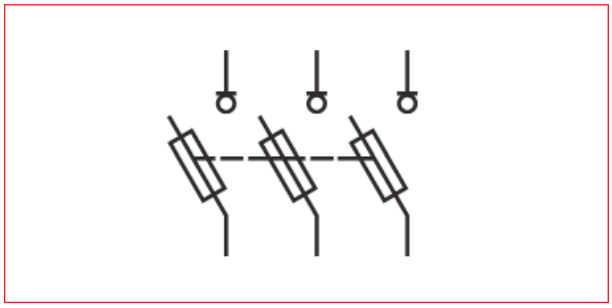

DESCRIPTION	AVAILABLE	ORDER NO.
Single clamp strap size 00		ISA05300
Size 00, 3-pole, 160A, M8		ISA05223-A
Prism clamp 1,5-70mm² for size 00		ISA05335

HRC-busbar-fuse load-breaker size 1 (250A) for 60mm system, series ARROW II

ISA05290

Schrack-Info

- Output direction from top or bottom, different types

DESCRIPTION	AVAILABLE	ORDER NO.
Size 1, 3-pole, 250A, M10, outlet bottom		**ISA05290**

HRC-busbar-fuse load-breaker size 1 (250A) for 60mm system, series ARROW BLUE

ISA05290-A

Schrack-Info

- For 60mm busbar-system (5mm or 10mm busbars)
- Output direction from top to bottom is easy and quickly to change
- 1-point quick-fixing
- Integrated infringe-protection side and top
- Contactless fuse take out
- Closing part sealable and lockable
- Park position for closing part
- Patented voltage measuring slots, tool-bound open, without tools close

Standard	IEC/DIN/EN 60947-3
For LV HRC fuse-links acc. to DIN VDE 0636-2	size 1
Rated operational voltage U_e	690VAC / 440V-DC
Rated operational current [1] I_e	250A
Conv. free air thermal current with fuse-links [1] I_{th}	250A
Rated frequency *f*	40-60Hz
Rated insulation voltage U_i	800V-AC
Total power loss at Ith (without fuse-links) P_V	22W
Rated impulse withstand voltage U_{imp}	8kV
Utilisation category [2]	AC-23B (400V/250A) [2b]
	AC-22B (500V/250A) [2b]
	AC-21B (690V/250A) [2b]
Rated conditional short-cirquit current [2] [3]	120 kA (500V) [2b]
	100 (690V) [2b]
Rated short–time withstand current I_{cw}	10kA(1s)
Max. permis. power loss per fuse-link P_a	23W
Degree of protection, front side	Operating condition IP20
	With clamp- and lateral cover IP20XC
	switching element open IP10
Ambient temperature [4] Tamb	-25 bis +55 °C
Rated operating mode	Uninterrupted duty
Actuation	dependent manual operation
Mounting position	vertical / horizontal
Altitude	up to 2000 m
Pollution degree	3
Overvoltage category	III
Cable terminal	Flat terminal, Bolt diameter M10
	Tightening torque 30-35Nm

[1] In case of mounting of several units in low voltage switchgearcombinations, please consider rated diversity factors acc. to EN 61439-1.
[2] It must be considered a minimum distance to earthed, conductive parts:
[2b] Lateral: 20mm / Above: 50mm
[3] Type tested with LV-HRC-fuse-links characteristic gG.
[4] 35°C Normal temperature, at 55°C with reduced operating current

HRC-busbar-fuse load-breaker size 1 (250A) for 60mm system, series ARROW BLUE

ISA05290-A Dimensions

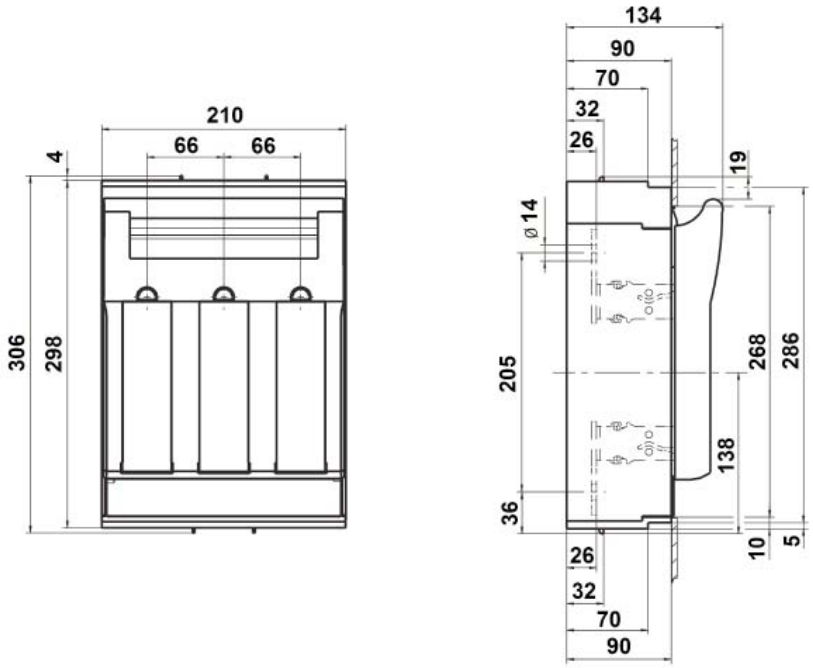

ISA05290-A Wiring diagram

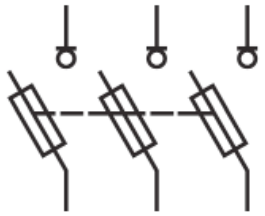

DESCRIPTION	AVAILABLE	ORDER NO.
Size 1, 3-pole, 250A, M10, outlet top or bottom		**ISA05290-A**

HRC-busbar-fuse load-breaker size 2 (400A) for 60mm system, series ARROW II

ISA05251

DESCRIPTION	AVAILABLE	ORDER NO.
Size 2, 3-pole, 400A, M10, outlet bottom		**ISA05251**

HRC-busbar-fuse load-breaker size 2 (400A) for 60mm system, series ARROW BLUE

ISA05251-A

Schrack-Info

- Output direction from top to bottom is easy and quickly to change
- 1-point quick-fixing
- Integrated infringe-protection side and top
- Contactless fuse take out
- Closing part sealable and lockable
- Park position for closing part
- Patented voltage measuring slots, tool-bound open, without tools close

Standard	IEC/DIN/EN 60947-3
For LV HRC fuse-links acc. to DIN VDE 0636-2	size 2
Rated operational voltage U_e	690VAC / 440 V DC
Rated operational current [1] I_e	400A
Conv. free air thermal current with fuse-links [1] I_{eh}	400A
Rated frequency *f*	40-60Hz
Rated insulation voltage U_i	800 V AC
Total power loss at Ith (without fuse-links) P_v	22W
Rated impulse withstand voltage U_{imp}	8kV
Utilisation category [2]	AC-23B (400V/400A) [2b]
	AC-22B (500V/400A) [2b]
	AC-21B (690V/400A) [2b]
Rated conditional short-cirquit current [2] [3]	120 kA (500V) [2b]
	100 (690V) [2b]
Rated short–time withstand current I_{cw}	10kA(1s)
Max. permis. power loss per fuse-link P_a	34W
Degree of protection, front side	Operating condition IP20
	With clamp- and lateral cover IP20XC
	switching element open IP10
Ambient temperature [4] Tamb	-25 bis +55 °C
Rated operating mode	Uninterrupted duty
Actuation	dependent manual operation
Mounting position	vertical / horizontal
Altitude	up to 2000 m
Pollution degree	3
Overvoltage category	III
Cable terminal	Flat terminal, Bolt diameter M10
	Tightening torque 30-35Nm

[1] In case of mounting of several units in low voltage switchgearcombinations, please consider rated diversity factors acc. to EN 61439-1.
[2] It must be considered a minimum distance to earthed, conductive parts:
[2b] Lateral: 20mm / Above: 50mm
[3] Type tested with LV-HRC-fuse-links characteristic gG.
[4] 35°C Normal temperature, at 55°C with reduced operating current

HRC-busbar-fuse load-breaker size 2 (400A) for 60mm system, series ARROW BLUE

ISA05251-A Dimensions

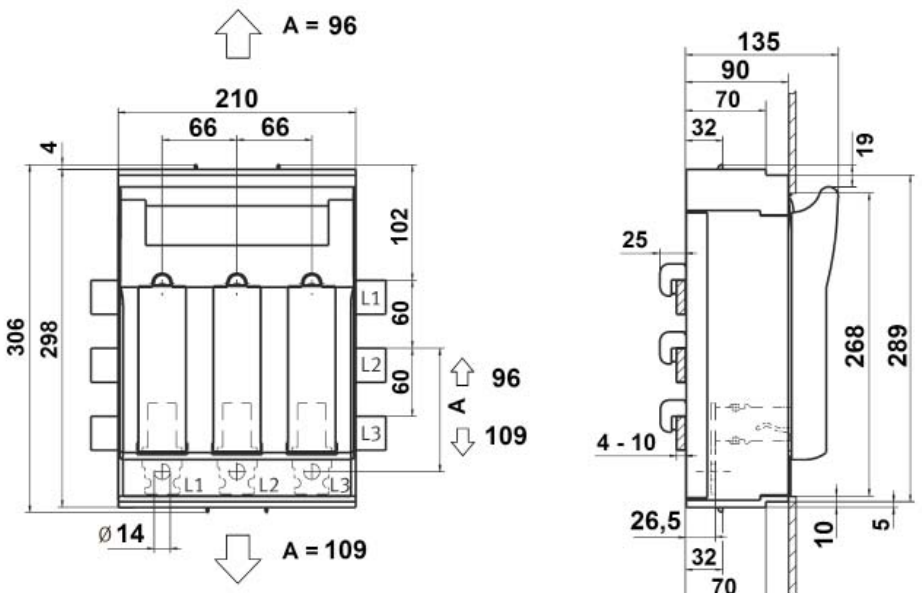

ISA05251-A Wiring diagram

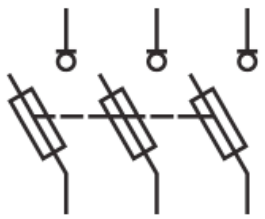

DESCRIPTION	AVAILABLE	ORDER NO.
Size 2, 3-pole, 400A, M10, outlet top or bottom		**ISA05251-A**

Accessories for NH-fuse load-breaker, for 60mm system, series ARROW BLUE

Schrack-Info

- Accessories for NH-fuse-load-breaker series ARROW BLUE
- Terminals
- Covers

DESCRIPTION	AVAILABLE	ORDER NO.
Single clamp strap size 00		**ISA05300**
Prism clamp 1,5-70mm² for size 00		**ISA05335**
Clip terminal ARROW BLUE size 1		**ISA05740-A**
Clamp terminal ARROW BLUE size 1		**ISA05742-A**
Boxterminal ARROW BLUE size 1		ISA05744-A
Clip terminal ARROW BLUE size 2		**ISA05741-A**
Clamp terminal ARROW BLUE size 2		**ISA05743-A**
Boxterminal ARROW BLUE size 2 and size 3		ISA05745-A
Terminal cover ARROW BLUE size 1		ISA05702-A
Terminal cover ARROW BLUE size 2		ISA05703-A
Height compensation adapter 70 mm to 90 mm for ARROW BLUE size 00		ISA05705-A
Lateral compensation profile 70 mm to 90 mm for ARROW BLUE size 00		ISA05706-A
Terminal cover extension 39 mm or 34 mm for ARROW BLUE size 00		ISA05707-A
Terminal cover extension 32 mm for ARROW BLUE size 00		ISA05708-A
Overlap protector for busbar system 39 mm or 34 mm for ARROW BLUE size 00		ISA05709-A
Overlap protector for busbar system 32 mm for ARROW BLUE size 00		ISA05710-A
Overlap protector for busbar system for output-side 39 mm or 34 mm for ARROW BLUE size 00		ISA05711-A
Overlap protector for busbar system for output-side 32 mm for ARROW BLUE size 00		ISA05712-A
Overlap protector for busbar system 39 mm or 34 mm for ARROW BLUE size 1		ISA05713-A
Overlap protector for busbar system 32 mm for ARROW BLUE size 1		ISA05714-A
Overlap protector for busbar system 39 mm or 34 mm for ARROW BLUE size 2		ISA05715-A
Overlap protector for busbar system 32 mm for ARROW BLUE size 2		ISA05716-A
Cover support top/bottom 60 and 70 mm for ARROW BLUE size 00		ISA05719-A
Cover support sied 32, 60 and 70 mm for ARROW BLUE size 00		ISA05720-A
Cover support top/bottom 60 and 70 mm for ARROW BLUE size 1-3		ISA05721-A

HRC-inline-fuse load-breaker size 00 (160A), for 60mm system, series ARROW II

ISA05260

Schrack-Info

- NH-strip-type fuse-switch-disconnector with adapter for 60mm busbar-system
- With cable connection at bottom side, optional at top side
- Width 50mm, for permanent mounting technology
- All parts of LSL made from halogenfree, self-extinguishing material
- Protection degree IP30, from front side, device closed, with clamp- and side cover
- Type label visible in built-in condition
- Lockable in closed position with up to 2 padlocks

Size	**NH00**
Standards	IEC/EN60947-3
Busbar distance	60mm
Poles	3
Switching mode	3pole switchable
Applicable for fuse-links	NH000 and NH00
Rated operating voltage	690V
Rated operating current	160A
Conv. free air thermal current with fuse-links	160A
Conv. free air thermal current with solid links	210A
Rated impulse voltage	8kV
Rated isolation voltage	800V
Rated frequency	50 - 60Hz
Total power loss at Ith (without fuse-link)	18W
Utilisation category	AC-22B (100A/690V)
	AC-22B (160A/400V)
	AC-22B (160A/500V)
Rated conditional short-cirquit current	80kA (AC 500V)
Max. permissible power dissipation per fuse-link	12W
Ambient temperature	-25 up to +55°C
	>35°C derating of rated current required
Type of Actuation	Dependent manual operation
Mounting position	user-defined
Pollution degree	3
Overvoltage category	III
Electrical endurance (switching cycles)	200
Mechanical endurance (switching cycles)	1400
Degree of protection	IP30
Cable terminal	Flat terminal M8
Cable lug (DIN 46 235)	1 x 10-95mm² (max. 25mm width)
Tightening torque	12-15 Nm

HRC-inline-fuse load-breaker size 00 (160A), for 60mm system, series ARROW II

ISA05260 Dimensions

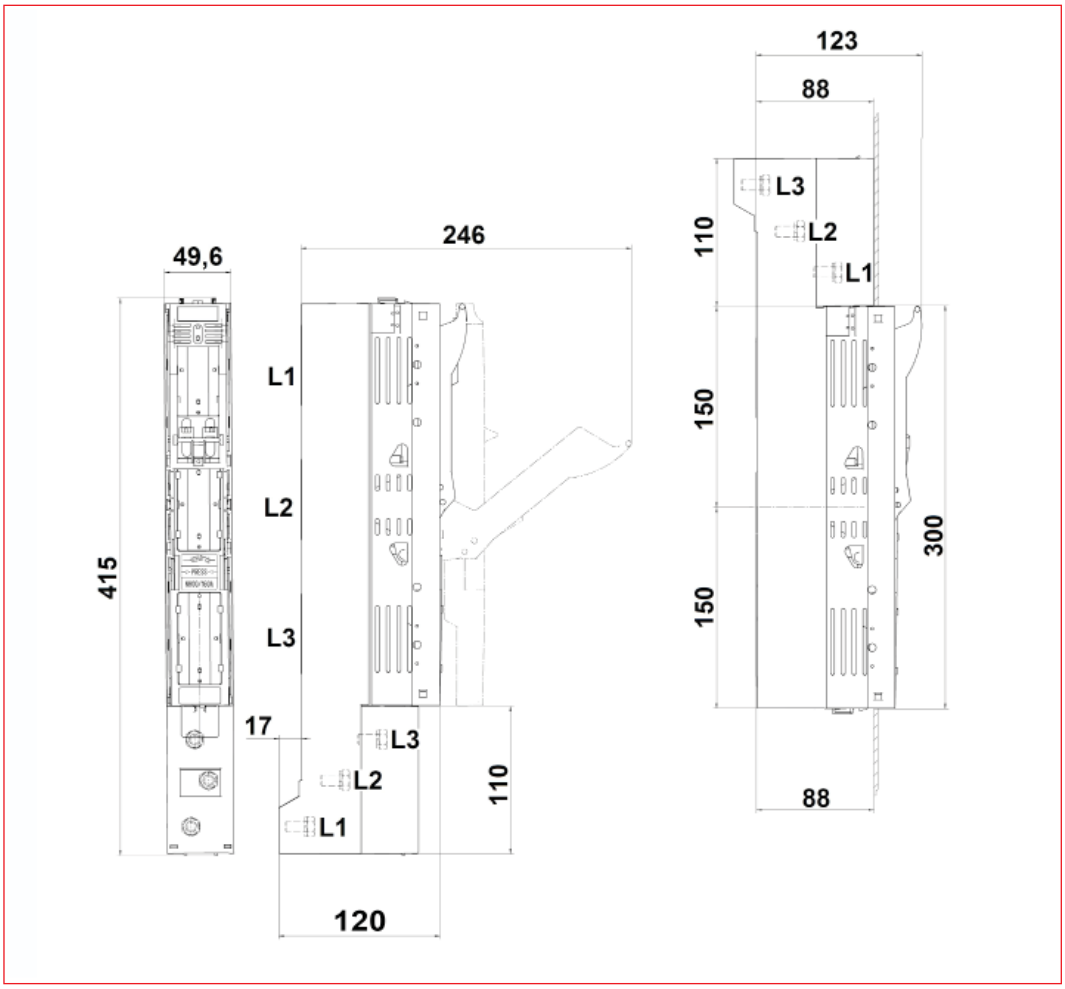

ISA05260 Wiring diagram

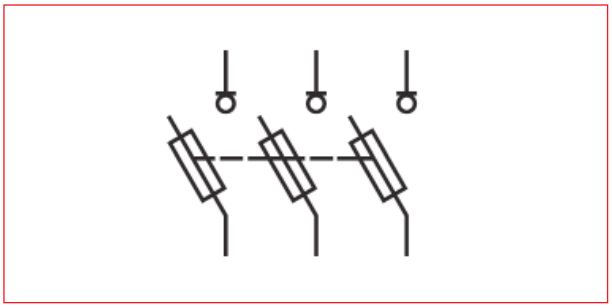

DESCRIPTION	AVAILABLE	ORDER NO.
Size 00, 3-pole, 160A, M8		ISA05260

HRC-busbar-fuse load-breaker, for 100mm system, series ARROW II

ISA05882

Schrack-Info

- For 100mm busbar-system

DESCRIPTION	AVAILABLE	ORDER NO.
ARROW-BLOC Size 1 for 100mm busbar-system, output top		**ISA05886**
ARROW-BLOC Size 2 for 100mm busbar-system, output top		**ISA05887**
ARROW-BLOC Size 3 for 100mm busbar-system, output bottom		ISA05883
ARROW-BLOC Size 3 for 100mm busbar-system, output top		ISA05884
ARROW-BLOC Size 1 for 100mm busbar-system, output bottom		ISA05881
ARROW-BLOC Size 2 for 100mm busbar-system, output bottom		ISA05882

HRC-busbar-fuse load-breaker, for 100mm system, series ARROW BLUE

ISA05881-A

Schrack-Info

- For 100mm busbar-system
- Output direction from top to bottom is easy and quickly to change
- Integrated infringe-protection side and top
- Contactless fuse take out
- Closing part sealable and lockable
- Park position for closing part
- Patented voltage measuring slots, tool-bound open, without tools close

DESCRIPTION	AVAILABLE	ORDER NO.
Size 1, 3-pole, 250A, M10 for 100mm busbar-system, output top or bottom		ISA05881-A
Size 2, 3-pole, 400A, M10 for 100mm busbar-system, output top or bottom		ISA05882-A

HRC-inline-fuse load-breaker size 00 (160A), for 100/185mm system, series ARROW II

ISA05261

Schrack-Info

- NH-strip-type fuse-switch-disconnector for 100mm busbar-system
- With cable connection at bottom side, optional at top side
- Width 50mm, for permanent mounting technology
- All parts of LSL made from halogenfree, self-extinguishing material
- Protection degree IP30, from front side, device closed, with clamp- and side cover
- Type label visible in built-in condition
- Lockable in closed position with up to 2 padlocks

Size	**NH00**
Standards	IEC/EN60947-3
Busbar distance	100mm
Poles	3
Switching mode	3pole switchable
Applicable for fuse-links	NH000 and NH00
Rated operating voltage	690V
Rated operating current	160A
Current measurement	No
Conv. free air thermal current with fuse-links	160A
Conv. free air thermal current with solid links	210A
Rated impulse voltage	8kV
Rated isolation voltage	800V
Rated frequency	50 - 60Hz
Total power loss at Ith (without fuse-link)	18W
Utilisation category	AC-22B (100A/690V)
	AC-22B (160A/400V)
	AC-22B (160A/500V)
Rated conditional short-cirquit current	80kA (AC 500V)
Max. permissible power dissipation per fuse-link	12W
Ambient temperature	-25 up to +55°C
	>35°C derating of rated current required
Type of Actuation	Dependent manual operation
Mounting position	user-defined
Pollution degree	3
Overvoltage category	III
Electrical endurance (switching cycles)	200
Mechanical endurance (switching cycles)	1400
Degree of protection	IP30
Cable terminal	Flat terminal M8
Cable lug (DIN 46 235)	1 x 10-95mm² (max. 25mm width)
Tightening torque	12-15 Nm

HRC-inline-fuse load-breaker size 00 (160A), for 100/185mm system, series ARROW II

ISA05261 Dimensions

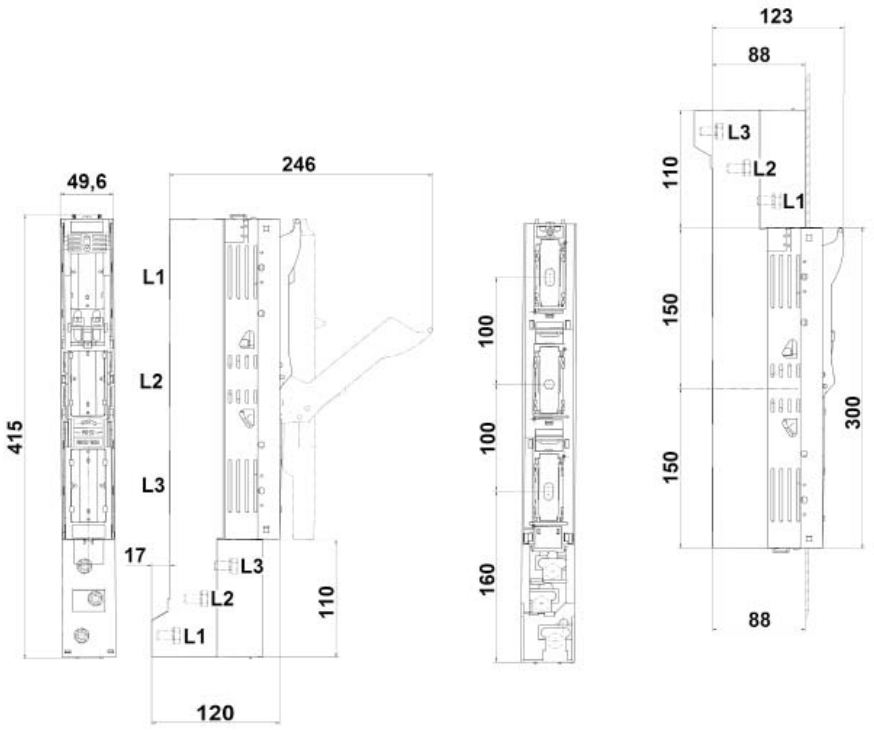

ISA05261 Wiring diagram

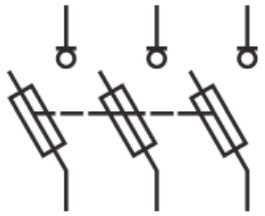

Page 243

DESCRIPTION	AVAILABLE	ORDER NO.
Size 00, 3-pole, 160A, M8, for 100 mm busbar-system		**ISA05261**
ARROW LINE size 00, 3 pole, f. 100mm busbar with Window bloc		ISA05261F
Size 00, 3-pole, 160A, for 100mm busbar-system with boxteminals		**ISA05303**
Single adapter f/busbar 185mm		**ISA05327**
Double adapter f/busbar 185mm		**ISA05326**
Adapter for 2 strips, size 00 - 100mm, clamp fixation		ISA05323
Cover for Double adapter for busbar 185mm		ISA05328
Forked clamp HRC-00		ISA05325
Single clamp strap size 00		**ISA05300**
Prism clamp 1,5-70mm² for size 00		**ISA05335**

HRC-inline-fuse load-breaker size 00 (160A), for 185mm system, series ARROW II

ISA05304

Schrack-Info

- NH-strip-type fuse-switch-disconnector for 185mm busbar-system
- With cable connection at bottom side, optional at top side
- Width 50mm
- All parts of LSL made from halogenfree, self-extinguishing material
- Protection degree IP30, from front side, device closed, with clamp- and side cover
- Type label visible in built-in condition
- Lockable in closed position with up to 2 padlocks

Size	**NH00**
Standards	IEC/EN 60947-3
Busbar distance	185mm
Poles	3
Switching mode	3pole switchable
Applicable for fuse-links	NH000 / NH00
Rated operating voltage	690V
Rated operating current	160A
Current measurement	No
Conv. free air thermal current with fuse-links	160A
Rated impulse voltage	8kV
Rated isolation voltage	800V
Rated frequency	50 - 60Hz
Total power loss at Ith (without fuse-link)	18W
Utilisation category	AC-22B (100A/690V)
	AC-22B (160A/400V)
	AC-22B (160A/500V)
Rated conditional short-cirquit current	120kA (AC 500V)
	100kA (AC 690V)
Max. permissible power dissipation per fuse-link	12W
Ambient temperature	-25 up to +55°C
	>35°C derating of rated current required
Type of Actuation	Dependent manual operation
Mounting position	user-defined
Altitude	2000m
Pollution degree	3
Overvoltage category	III
Electrical endurance (switching cycles)	200
Mechanical endurance (switching cycles)	1400
Degree of protection	IP30
Cable terminal	Flat terminal M8
Cable lug (DIN 46 235)	1 x 10-95mm² (max. 25mm width)
Tightening torque	12-15Nm

HRC-inline-fuse load-breaker size 00 (160A), for 185mm system, series ARROW II

ISA05304

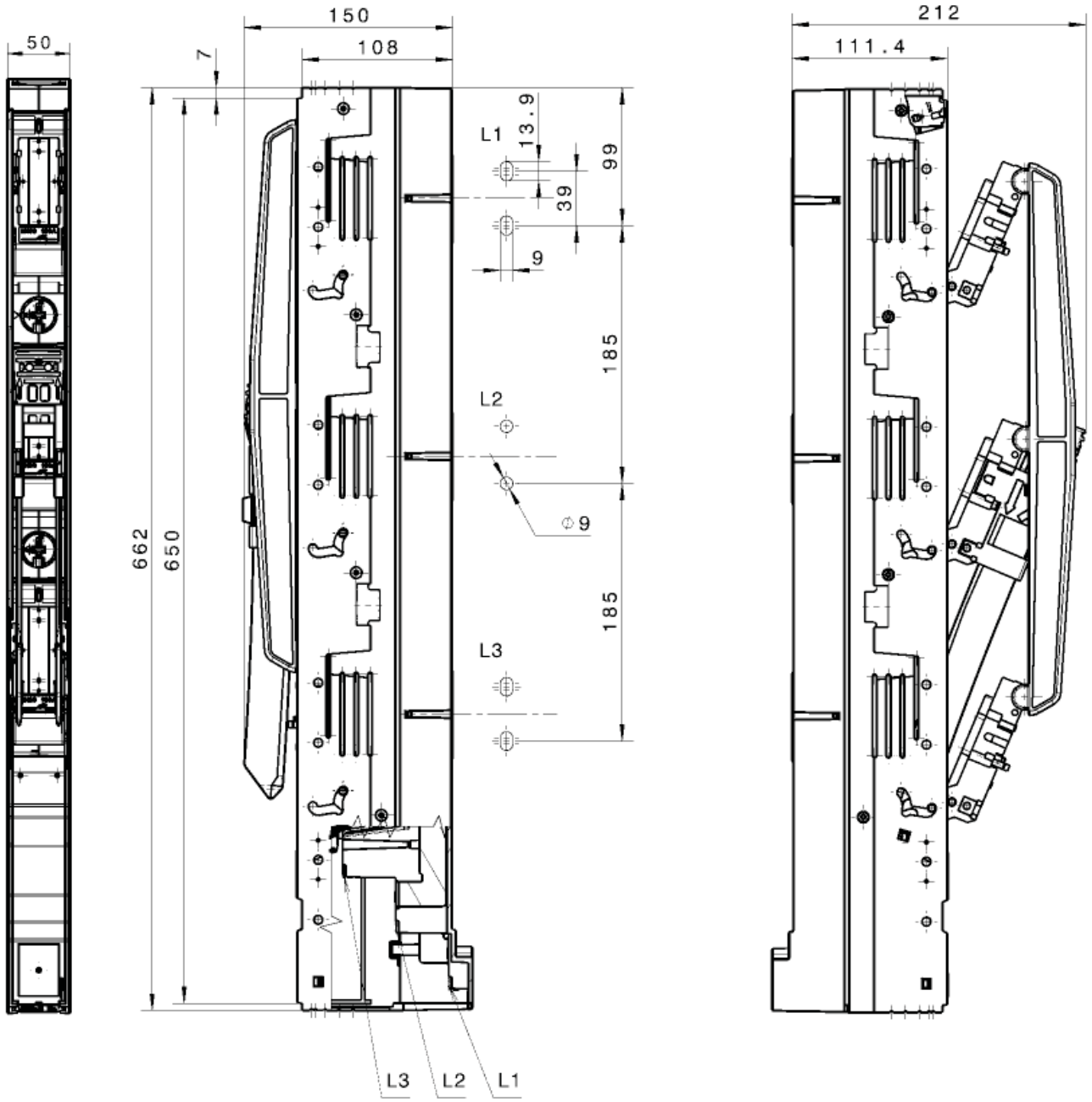

ISA05304 Wiring diagram

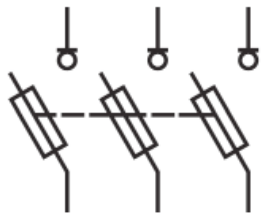

DESCRIPTION	AVAILABLE	ORDER NO.
HRC-in-line-fuse ARROW LINE size 00, 3pole, 185mm-system		**ISA05304**
HRC-fuse-base for 185mm busbar system		ISA05172

HRC-inline-fuse load-breaker size 1 (250A), for 185mm system, series ARROW II

ISA05305

Schrack-Info

- NH-strip-type fuse-switch-disconnector for 185mm busbar-system
- With cable connection at bottom side, optional at top side
- Width 50mm
- All parts of LSL made from halogenfree, self-extinguishing material
- Base part as carrier of current carrying components made from glassfibre reinforced polyester
- Fuse holding contacts with sacrificial electrode and short-circuit interlock
- With access points for safety voltage measurement on the fuse-holding contact
- Protection degree IP30, from front side, device closed, with clamp- and side cover
- Type label visible in built-in condition
- Lockable in closed position and in stand-by position with up to 3 padlocks

Size	**NH1**
Standard	IEC/EN 60947-3
Busbar distance	185mm
Poles	3
Switching mode	3pole switchable
Applicable for fuse-links	NH1
Rated operating voltage	690V
Rated operating current	250A
Current measurement	No
Conv. free air thermal current with fuse-links	250A
Conv. free air thermal current with solid links	400A
Rated impulse voltage	12kV
Rated isolation voltage	1000V
Rated frequency	40 - 60Hz
Contact system	DELTA-contact system with low power loss
Total power loss at Ith (without fuse-link)	23W
Utilisation category	AC-22B (250A/500V)
	AC-22B (250A/690V)
	AC-23B (250A/400V)
Rated conditional short-cirquit current	120 (AC 500V)(kA)
Max. permissible power dissipation per fuse-link	32W
Ambient temperature	-25 up to +55°C
	>35°C derating of rated current required
Type of Actuation	Dependent manual operation
Mounting position	vertical / horizontal
Pollution degree	3
Overvoltage category	IV
Electrical endurance (switching cycles)	200
Mechanical endurance (switching cycles)	1400
Degree of protection	IP30
Cable terminal ISA05305	Flat terminal M10
	Cable lug (DIN 46 235) 1 x 25-150mm²
	Tightening torque 30-35Nm
Cable terminal ISA05305	V-box terminal
	Clamping cross-section 25-240mm²
	Conductor Cu/Al re/se, Cu am/rm
	Tightening torque 32Nm

HRC-inline-fuse load-breaker size 1 (250A), for 185mm system, series ARROW II

ISA05305 Dimensions

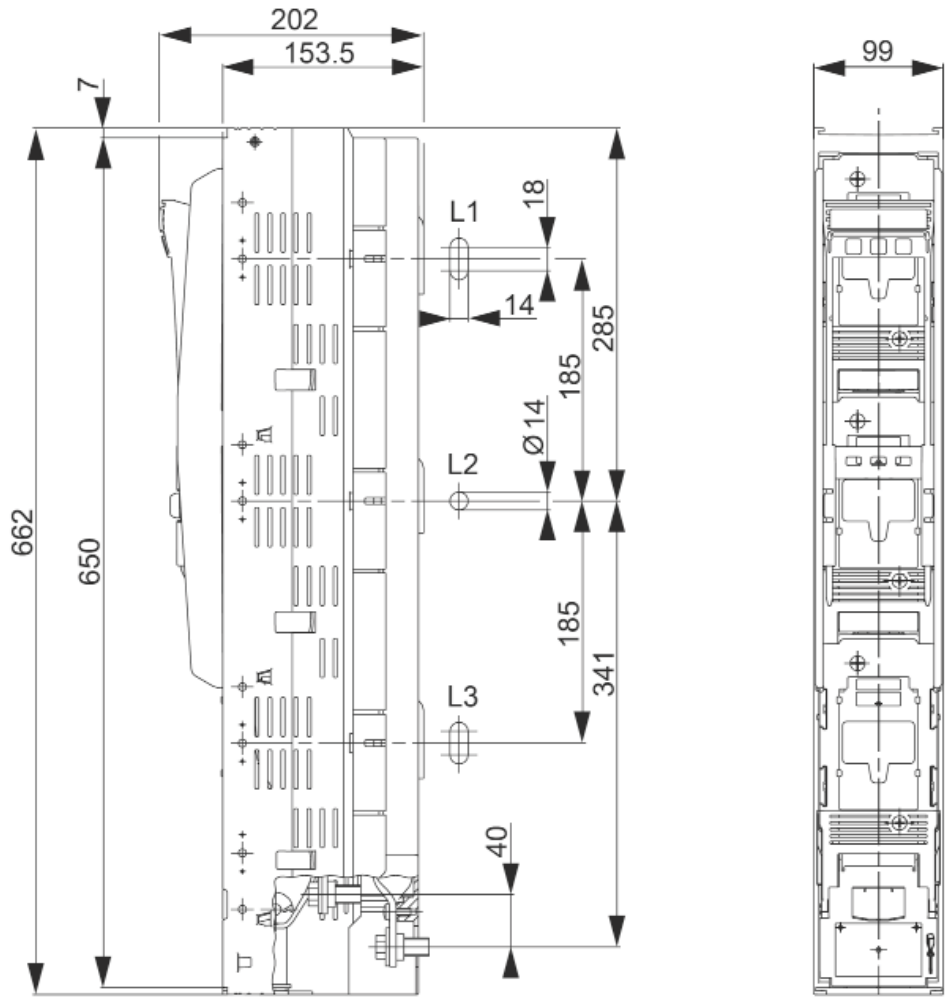

ISA05305 / ISA05306 Wiring diagram

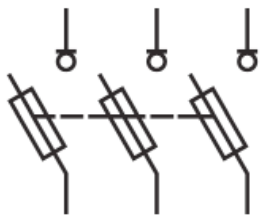

DESCRIPTION	AVAILABLE	ORDER NO.
Size 1, 3-pole, 250A, M10		**ISA05305**
Size 1, 3-pole, 250A, with V-terminal		**ISA05306**

HRC-inline-fuse load-breaker size 2 (400A), for 185mm system, series ARROW II

ISA05311

Schrack-Info

- NH-strip-type fuse-switch-disconnector for 185mm busbar-system
- With cable connection at bottom side, optional at top side
- Width 50mm
- All parts of LSL made from halogenfree, self-extinguishing material
- Base part as carrier of current carrying components made from glassfibre reinforced polyester
- Fuse holding contacts with sacrificial electrode and short-circuit interlock
- With access points for safety voltage measurement on the fuse-holding contact
- Protection degree IP30, from front side, device closed, with clamp- and side cover
- Type label visible in built-in condition
- Lockable in closed position and in stand-by position with up to 3 padlocks

Size	**NH2**
Standard	IEC/EN 60947-3
Busbar distance	185mm
Poles	3
Switching mode	3pole switchable
Applicable for fuse-links	NH1 and NH2
Rated operating voltage	690V
Rated operating current	400A
Current measurement	No
Conv. free air thermal current with fuse-links	400A
Conv. free air thermal current with solid links	630A
Rated impulse voltage	12kV
Rated isolation voltage	1000V
Rated frequency	40 - 60Hz
Contact system	DELTA-contact system with low power loss
Total power loss at Ith (without fuse-link)	54W
Utilisation category	AC-21 B (400A/690V)
	AC-22B (400A/500V)
	AC-23B (400A/400V)
Rated conditional short-cirquit current	120kA (AC 500V)
Max. permissible power dissipation per fuse-link	45W
Ambient temperature	-25 up to +55°C
Ambient temperature	>35°C derating of rated current required
Mounting position	vertical / horizontal
Altitude	2000m
Pollution degree	3
Overvoltage category	IV
Electrical endurance (switching cycles)	200
Mechanical endurance (switching cycles)	800
Degree of protection	IP30
Cable terminal ISA05311	Flat terminal M 12
	Cable lug (DIN 46 235) 1 x 25-240mm²
	Tightening torque 30-35Nm
Cable terminal ISA05312	V-box terminal
	Clamping cross-section 25-240mm²
	Conductor Cu/Al re/se, Cu am/rm
	Tightening torque 32Nm

HRC-inline-fuse load-breaker size 2 (400A), for 185mm system, series ARROW II

ISA05311 Dimensions

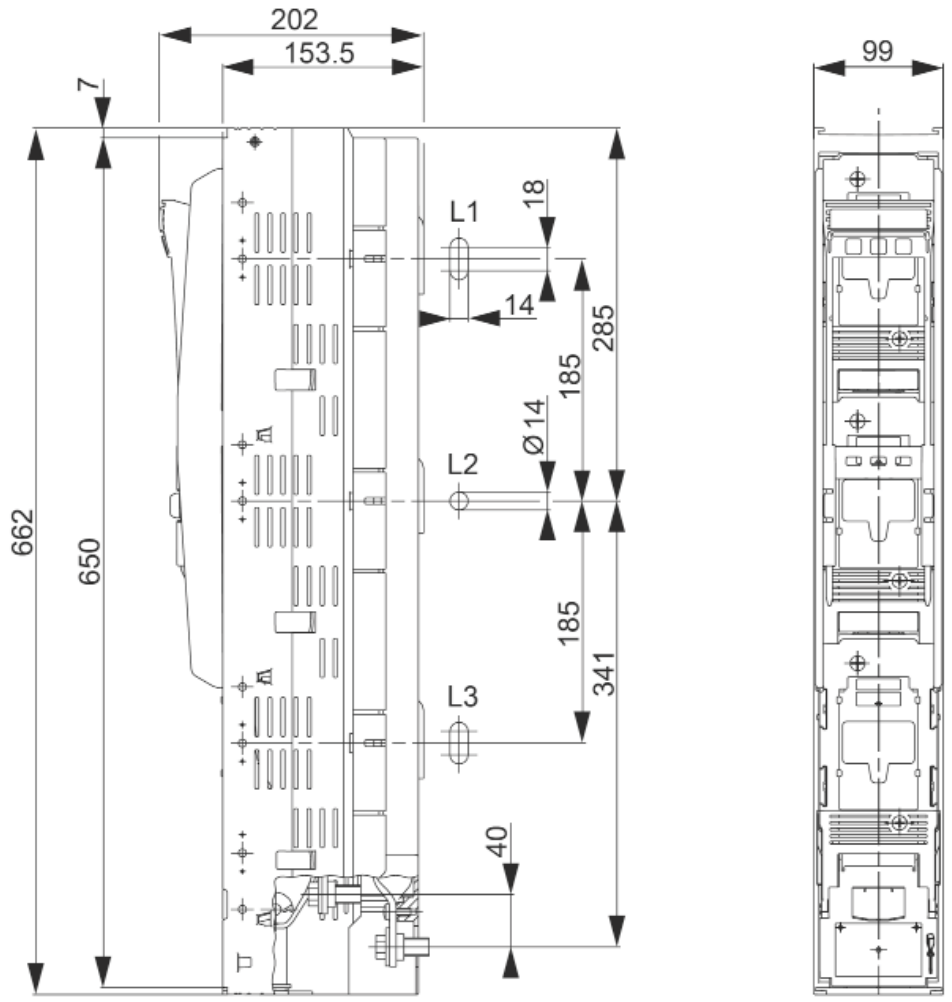

ISA05311 / ISA05312 Wiring diagram

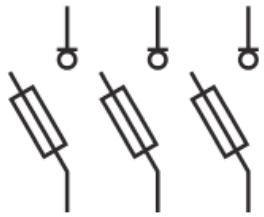

DESCRIPTION	AVAILABLE	ORDER NO.
Size 2, 3-pole, 400A, M12		**ISA05311**
Size 2, 3-pole, 400A, with V-terminal		**ISA05312**
ARROW LINE size 2, 3pole, 1pol switchable, 185mm w. V-term.		ISA05352
HRC-in-line-fuse ARROW LINE size 2, 3pole, 185mm, M12		ISA05342

HRC-inline-fuse load-breaker size 3 (630A), for 185mm system, series ARROW II

ISA05320

Schrack-Info

- NH-strip-type fuse-switch-disconnector for 185mm busbar-system
- With cable connection at bottom side, optional at top side
- Width 50mm
- All parts of LSL made from halogenfree, self-extinguishing material
- Base part as carrier of current carrying components made from glassfibre reinforced polyester
- Fuse holding contacts with sacrificial electrode and short-circuit interlock
- With access points for safety voltage measurement on the fuse-holding contact
- Protection degree IP30, from front side, device closed, with clamp- and side cover
- Type label visible in built-in condition
- Lockable in closed position and in stand-by position with up to 3 padlocks

Size	**NH3**
Standard	IEC/EN 60947-3
Busbar distance	185mm
Poles	3
Switching mode	3pole switchable
Applicable for fuse-links	NH1, NH2 and NH3
Rated operating voltage	690V
Rated operating current	630A
Current measurement	No
Conv. free air thermal current with fuse-links	630A
Conv. free air thermal current with solid links	800A
Rated impulse voltage	12kV
Rated isolation voltage	1000V
Rated frequency	40 - 60Hz
Contact system	DELTA-contact system with low power loss
Total power loss at Ith (without fuse-link)	115W
Utilisation category	AC-21B (630A/690V)
	AC-22B (630A/500V)
	AC-23B (630A/400V)
Rated conditional short-cirquit current	120kA (AC 500V)
Rated short-time withstand current	10kA
Max. permissible power dissipation per fuse-link	48W
Ambient temperature	-25 up to +55°C
Ambient temperature	>35°C derating of rated current required
Type of Actuation	Dependent manual operation
Mounting position	vertical / horizontal
Pollution degree	3
Overvoltage category	IV
Electrical endurance (switching cycles)	200
Mechanical endurance (switching cycles)	800
Degree of protection	IP30
Cable terminal ISA05320	Flat terminal M 12
	Cable lug (DIN 46 235) 1 x 25-300mm² (max. 43mm width)
	Tightening torque 35-40Nm
Cable terminal ISA05321	V box terminal
	Clamping cross-section 25-240mm²
	Conductor Cu/Al re/se, Cu am/rm
	Tightening torque 32Nm

HRC-inline-fuse load-breaker size 3 (630A), for 185mm system, series ARROW II

ISA05320 Dimensions

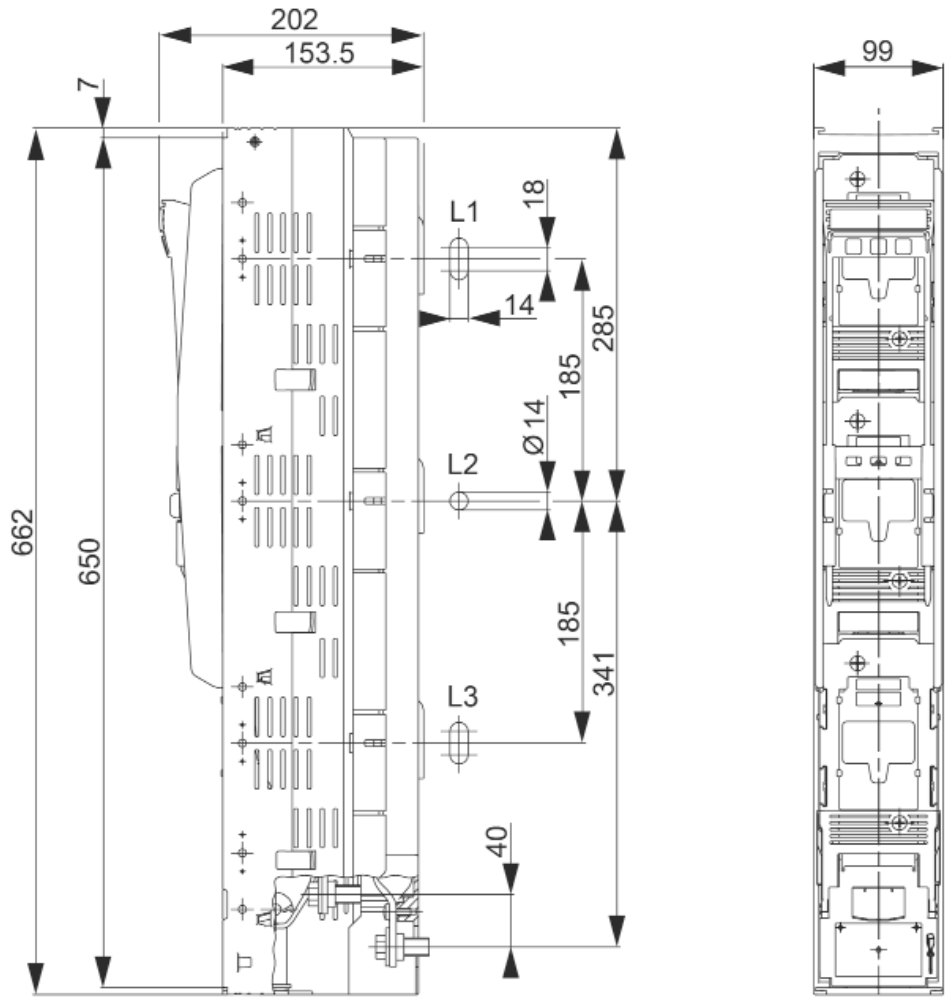

ISA05320 / ISA05321 Wiring diagram

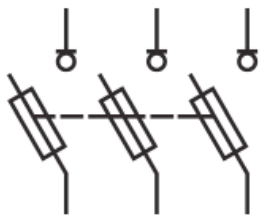

DESCRIPTION	AVAILABLE	ORDER NO.
Size3, 3-pole, 630A, M12		**ISA05320**
Size3, 3-pole, 630A, with V-terminal		**ISA05321**
HRC-in-line-fuse ARROW LINE size 3, 3pole, 185mm, M12		ISA05343

HRC-connection-fuse load-breaker size 3 (630A), for 185mm system, series ARROW II

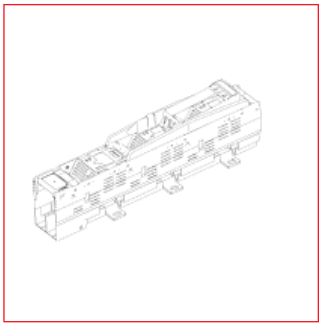

ISA05331

Schrack-Info

- Busbar coupler, Terminal at right or left side with screw M12
- With cable connection at bottom side, optional at top side
- Width 100mm, for permanent mounting technology
- All parts of LSL made from halogenfree, self-extinguishing material
- Base part as carrier of current carrying components made from glassfibre reinforced polyester
- Fuse holding contacts with sacrificial electrode and short-cirquit interlock
- With access points for safety voltage measurement on the fuse-holding contact

Size	**NH3**
Product Lifecycle	Active product
Standard	IEC/EN60947-3
Special features	Busbar coupler
	ISA05330: Terminal at left side with screw M12
	ISA05331: Terminal at right side with screw M12
Rated operating current	630A
Size	NH3
Busbar distance	185mm
Rated operating voltage	690V
Conv. free air thermal current with fuse-links	630A
Rated conditional short-cirquit current	120 (AC 500V)kA
Conv. free air thermal current with solid links	800A
Rated impulse voltage	12kV
Rated isolation voltage	1000V
Rated frequency	40 - 60Hz
Contact system	DELTA-contact system with low power loss
Utilisation category	AC-21B (630A/690V)
	AC-22B (630A/500V)
	AC-23B (630A/400V)
Max. permissible power dissipation per fuse-link	48W
Ambient temperature	-25 up to +55 (>35 derating of rated current required)°C
Type of Actuation	Dependent manual operation
Mounting position	vertical / horizontal
Pollution degree	3
Overvoltage category	IV
Electrical endurance (switching cycles)	200
Mechanical endurance (switching cycles)	800
Rated short-time withstand current	15kA
Applicable for fuse-links	
Cable terminal	busbar terminal M12 - busbar coupler
Degree of protection	IP30

HRC-connection-fuse load-breaker size 3 (630A), for 185mm system, series ARROW II

ISA05330 / ISA05331 Dimensions

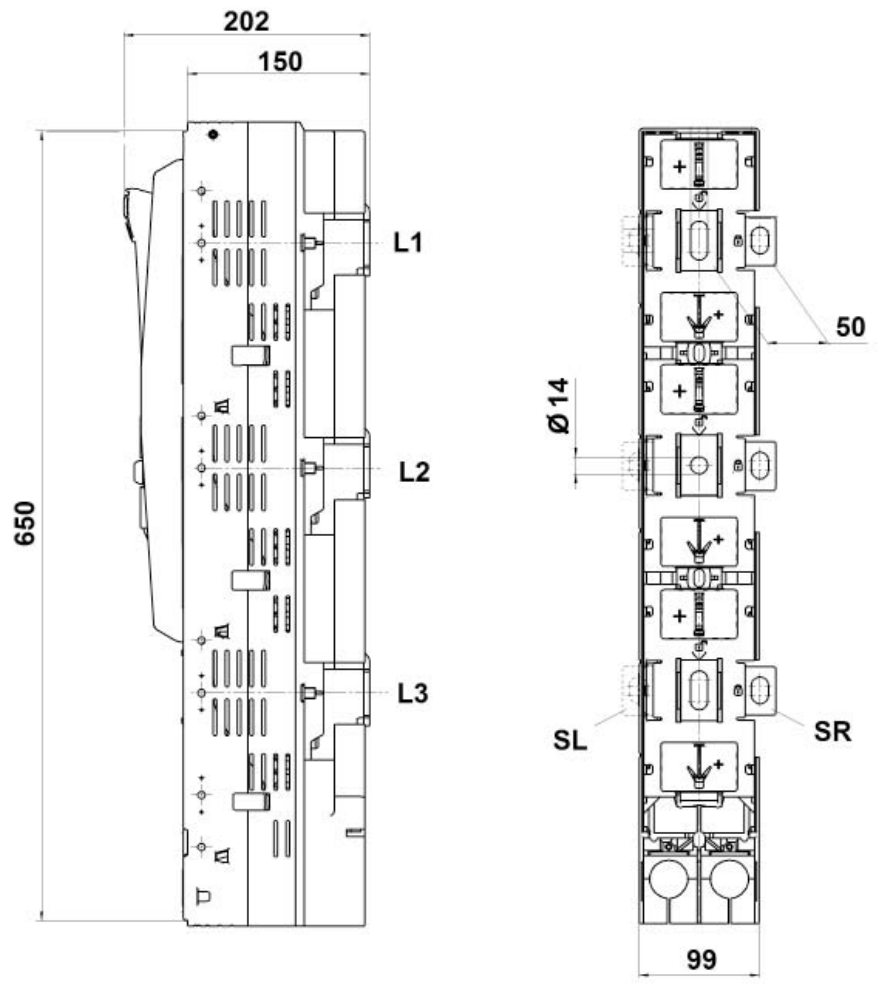

ISA05330 / ISA05331 Wiring diagram

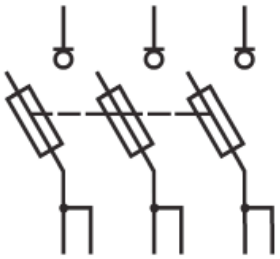

DESCRIPTION	AVAILABLE	ORDER NO.
Input-HRC-in-line-fuse ARROW LINE size3, 3pole, 185mm, left		ISA05330
Input-HRC-in-line-fuse ARROW LINE size3, 3pole, 185mm, right		ISA05331

Accessories for ARROW LINE series ARROW II

ISA05334

ISA05730

ISA05329

Schrack-Info

- Accessories for NH (HRC)-strip-type fuse-switch-disconnector, series ARROW II
- Fuse links and knife links are in the chapter accessories for NH (HRC) - material

DESCRIPTION	AVAILABLE	ORDER NO.
Terminals for drillingfree mounting		**ISA05333**
Current transformer 150A for ARROW LINE with CT-mounting		ISA05345
Current transformer 400A for ARROW LINE with CT-mounting		ISA05347
Current transformer 600A for ARROW LINE with CT-mounting		ISA05348
V-double-clamp retrofit kit, size 1-3, 2 x 185 - 240mm²		**ISA05730**
Adapterplate for L1 on ARROW LINE		ISA05729
Adjusting cover for ARROW II size 00 (1 pck = 2 pcs)		**ISA05329**
Cover cap for top or bottom terminal ARROW II 1-3		**ISA05334**